GRETSCH-UNITAS

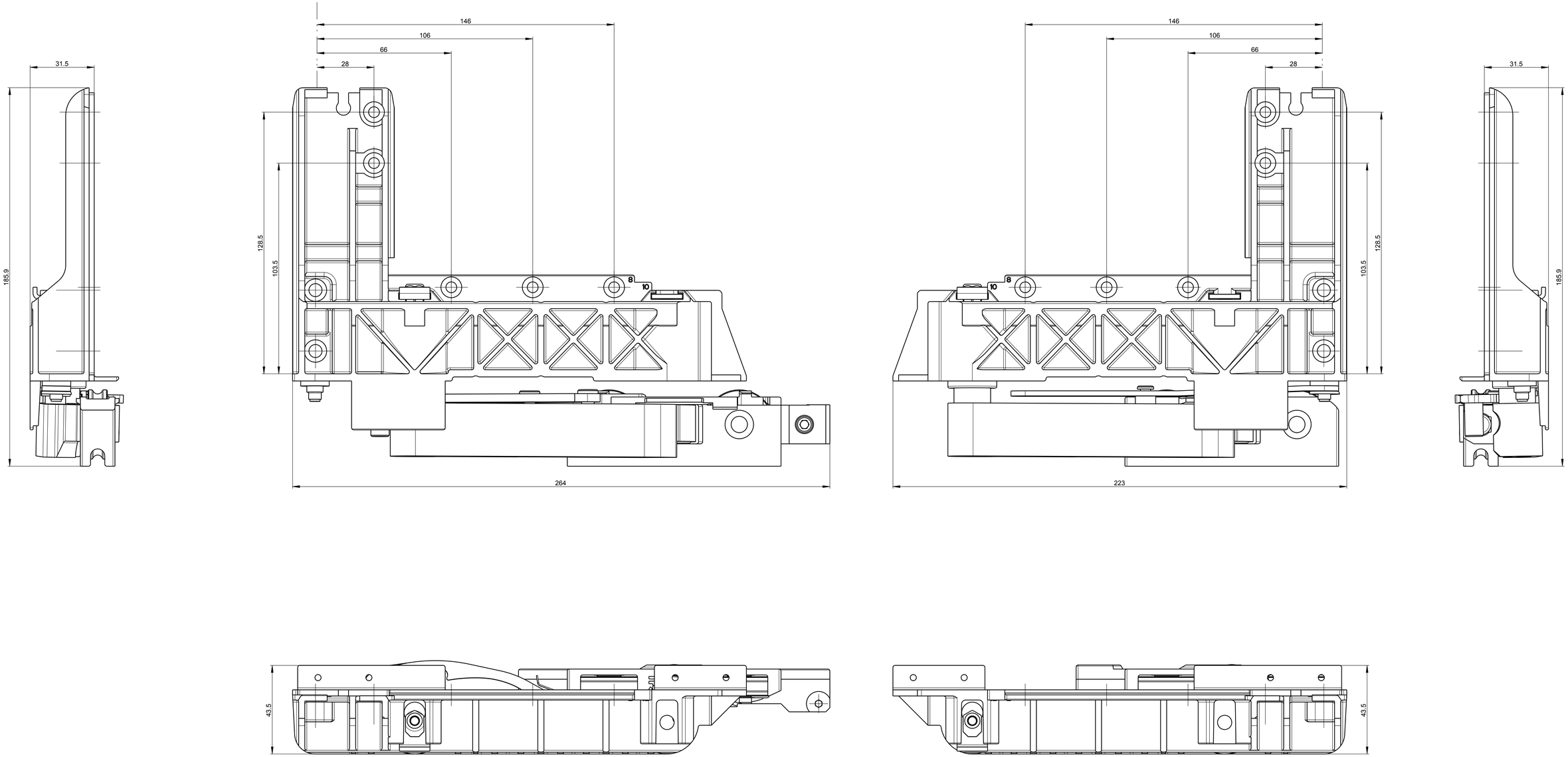

Proprietary rights apply in accordance with ISO 16016.

Description:
Krt. PSK Laufschuh GU-966/200
--
Set T&S bogie GU-966/200

Release No. --	Level	Released		Scale	Modification 1
Mod. No. --	Ver.	--	--	1:1	Size 1
	Draft	23.06.2016	Th		Drawing No. K-15266-00-L
Replacement for --					Sheet 1/1

V4